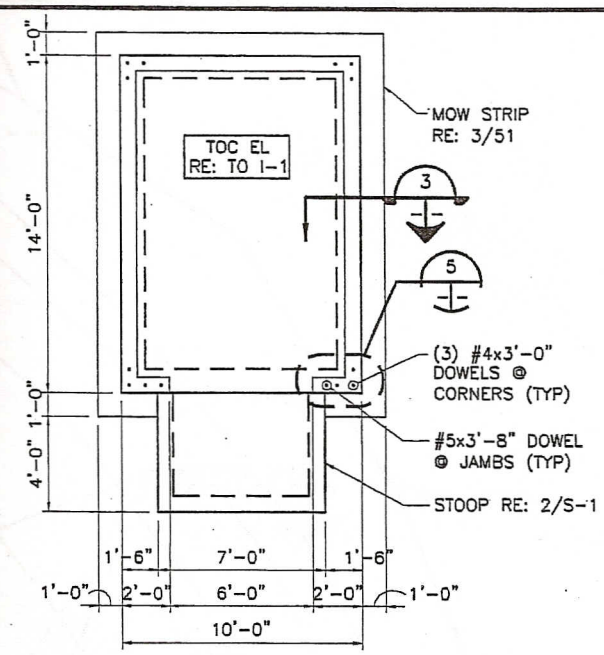

1 FOUNDATION PLAN

1/4"=1'-0"

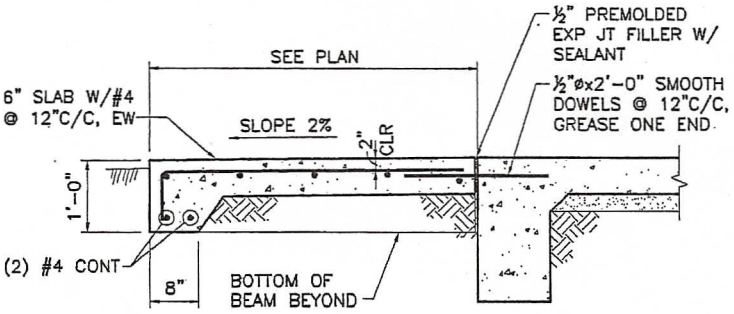

2 STOOP DETAIL

NOT TO SCALE

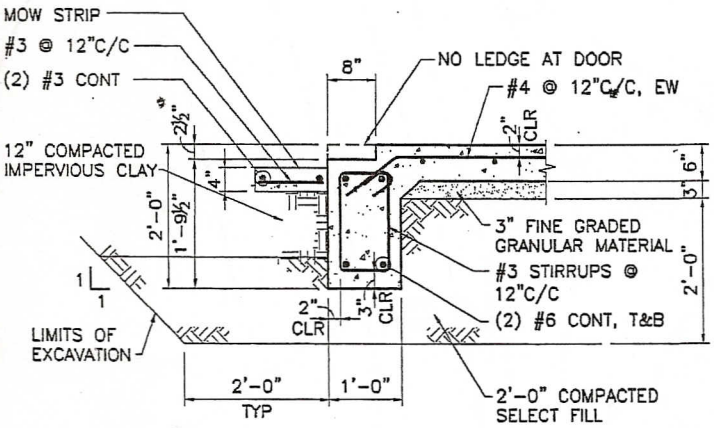

3 EXTERIOR GRADE BEAM SECTION

3/4"=1'-0"

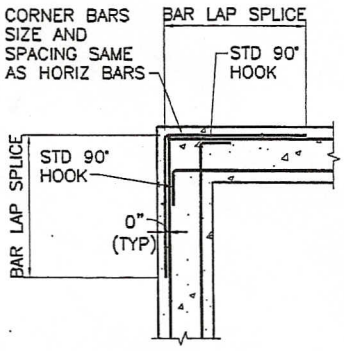

NOTE:
REINFORCING SHOWN APPLIES TO TOP AND BOTTOM BARS.

4 GRADE BEAM CORNER REINFORCEMENT

NOT TO SCALE

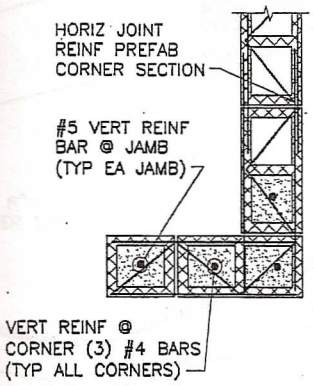

8" CMU WALL CORNER AND JAMB REINFORCING DETAIL

NOT TO SCALE

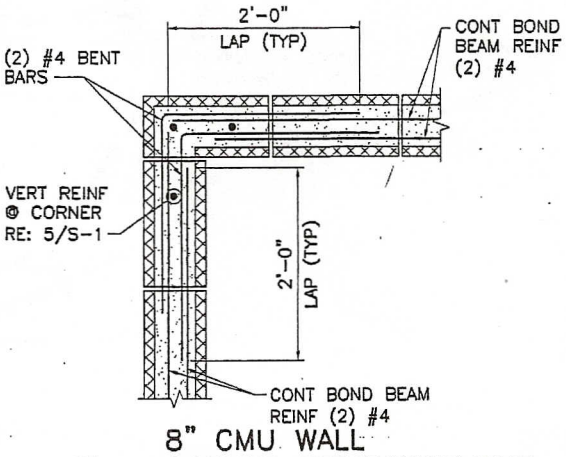

6 8" CMU WALL CORNER REINFORCEMENT

NOT TO SCALE

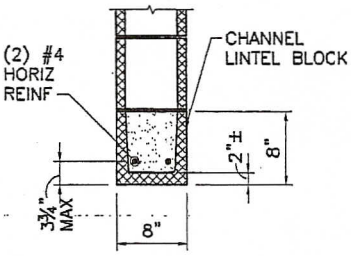

PROVIDE 8" MIN BEARING AT EACH SIDE OF CLEAR SPAN

7 CMU LINTEL DETAIL

NOT TO SCALE

0 1' 2' 4' 8'
1/4"=1'-0"

0 6" 1' 2'
3/4"=1'-0

STATE OF TEXAS
MICHAEL RAY ROBERSON
REGISTERED
5970
PROFESSIONAL ENGINEER

Freese and Nichols
4055 International Plaza, Suite 200
Fort Worth, Texas 76109

CITY OF DUNCANVILLE, TEXAS

HARRINGTON PARK WELL AND POND

STRUCTURAL

F&N JOB NO.	DNV0718B
DATE	12-28-07
DESIGNED	MRR
DRAWN	JAW
REVISED	

NO.	ISSUE	BY	DATE

SHEET S-1

SEQ. 6